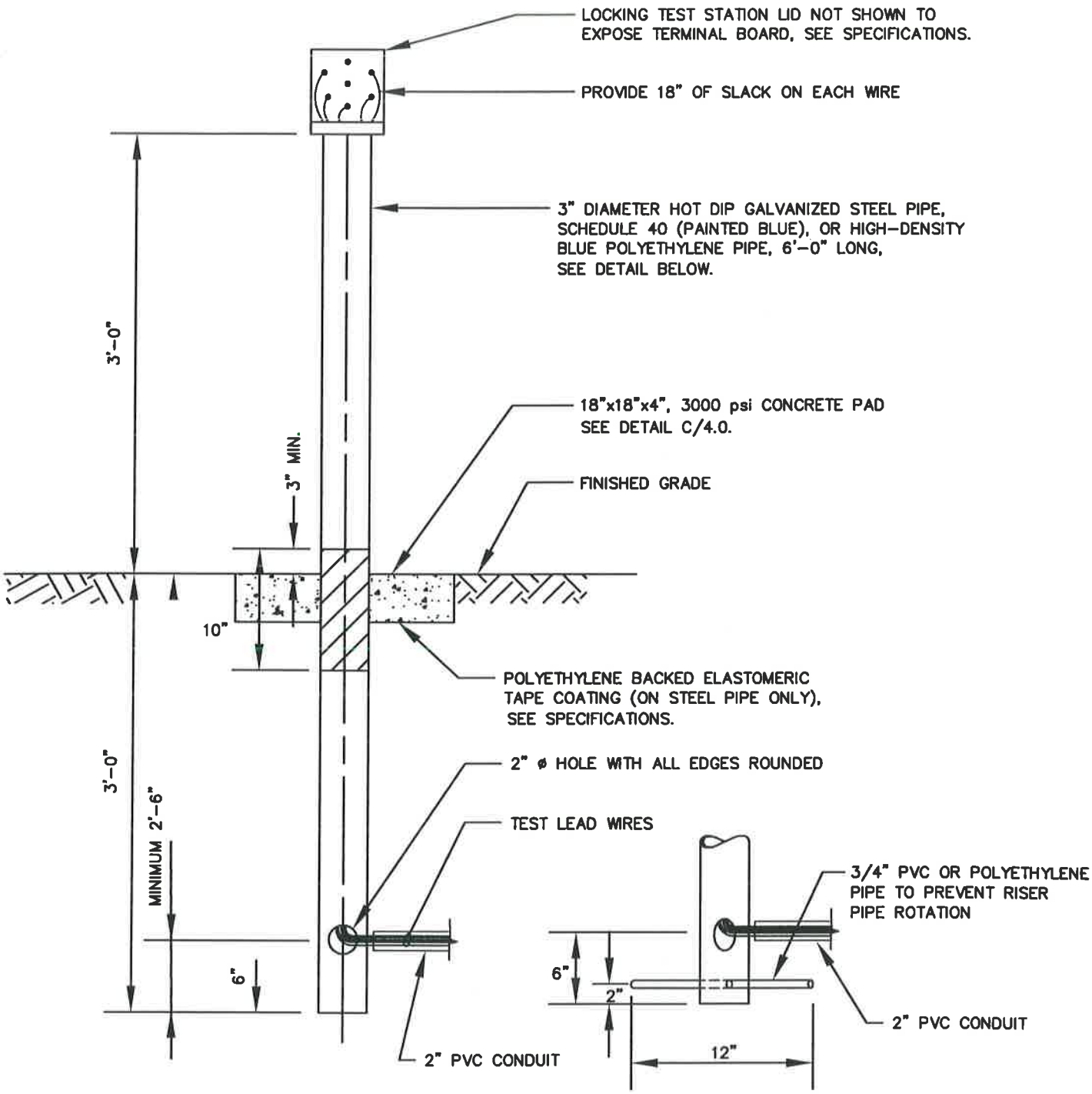

POLYETHYLENE PIPE INSTALLATION ONLY

NOTES:

1. WHERE TEST STATION IS NOT DIRECTLY OVER PIPELINE, USE DETECTABLE WARNING TAPE (YELLOW) OVER TEST WIRES, SEE SPECIFICATIONS.
2. LOCATE TEST STATION OUTSIDE OF PROPOSED OR EXISTING PAVED AREAS
3. RUN ALLS WIRES IN 2" PVC SCH. 40 FROM THE CONNECTION POINT UNTIL THEY REACH THE BOTTOM OF THE TEST STATION ASSEMBLY.

WASHINGTON SUBURBAN SANITARY COMMISSION	APPROVED: 8/12/'16 Chief Engineer	STANDARD DETAIL PIPE MOUNTED ABOVE GROUND TEST STATION	C / 4.2